"Triplex Diaphragm" 3426 / 3526 / 3626 Series Automatic Water System Pump

Model 3426 / 3526 / 3626 Series

FEATURES

- Self–Priming
- Dry Running
- Soft Noise Absorbing Mounts
- Snap–in Port Fittings
- Built-in Bypass : Less Pulsation
- Reduces need for accumulator tank
- Corrosion Resistant Materials
- Meets ISO 8846 (Ignition protection)

SPECIFICATIONS

Motor: Permanent Magnet, Ball Bearing Totally Enclosed. CE Models are fully suppressed.

Pump: Three chamber diaphragm design Self-priming up to 9 feet suction lift; Pump able to run dry without damage

Dimensions English (SI)

Pump Series	Height inches (mm)	Length inches (mm)	Width inches (mm)	Weight Lb (Kg)
3X26XXX	4.75 (121)	9.00 (229)	6.00 (152)	3.50 (1.59)

MODEL*	VOLTS	AMP DRAW @10 psi (0.7 bar)	FLOW GPM (LPM)	PRESSURE SWITCH Max psi (bar)	BYPASS
03526144	12V dc	4.4	2.9 (11)	50 (3.4)	Yes
R3626344	24V dc	2.2	2.9 (11)	40 (2.8)	Yes
R3426144	12V dc	4.4	2.9 (11)	25 (1.7)	Yes
R3426344	24V dc	2.2	2.9 (11)	25 (1.7)	Yes
R3426148	12V dc	3.5	2.0 (8)	25 (1.7)	Yes
R3426348	24V dc	1.7	2.0 (8)	25 (1.7)	Yes

*CE fully suppressed models are identified by a prefix "R" and a CE mark on the label.(i.e. R3626144).
Self Declaration Of Conformance (SDOC) is available upon request.

OPERATION

With pump switch off and battery fully charged, fill water tank, open all faucets, then turn pump switch on. Water will begin to flow. When the water is free of air, turn faucets off. Remember, you are filling the water heater and the toilet and shower lines. When all valves are shut-off, pump will stop. Should pump fail to stop, turn switch off and see the trouble shooting guide. **CAUTION -** Pump surface will get hot to the touch if operated for extended periods of time under pressurized conditions.

DIMENSIONAL DRAWING

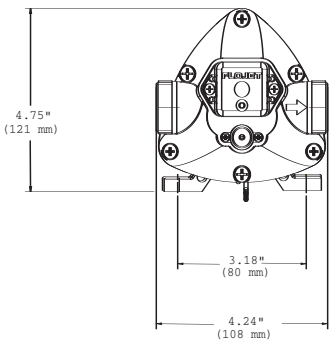

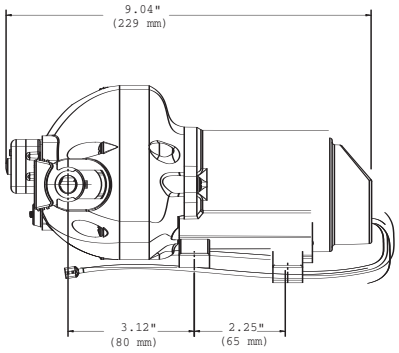

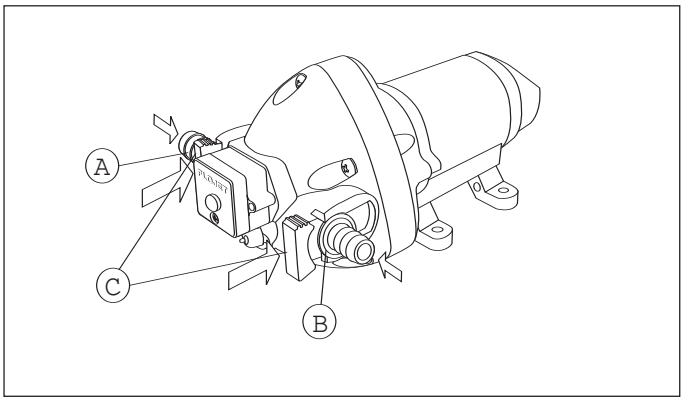

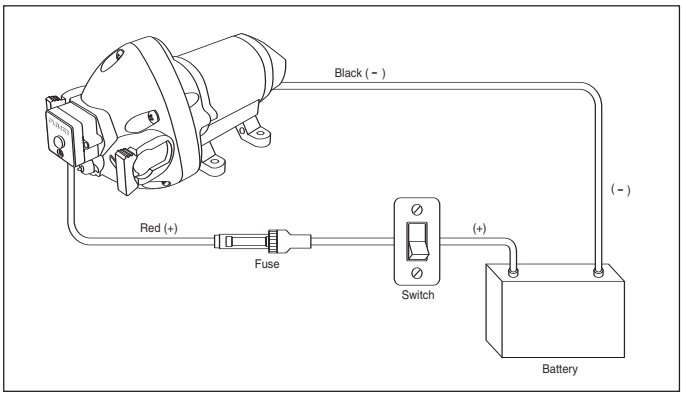

INSTALLATION

STEP 1
Remove shipping plugs from pump ports. Some water from factory testing may spill out.

STEP 2
Connect fittings supplied with the pump to the RV's plumbing. Use 1/2' I.D. Flexible hose (preferably braided or reinforced) to reduce vibration through the plumbing system as shown on Fig. 1. Use hose clamps on the slip-on barb hose connectors.

STEP 3
Slide rubber mounts fully into 4 mounting tracks.

STEP 4
Mount pump vertically, with pump head down or horizontally in an accessible location. If mounting vertically, motor up, attach motor mounts first then pump head mounts, while supporting weight of pump.

STEP 5
Install inlet A and discharge B port connectors. Firmly push slide clips C forward to lock port connectors in place.

STEP 6
Install a Flojet strainer in an accessible location (for inspection and cleaning) between the tank and pump inlet.
This strainer or equivalent is required for pump warranty to be valid.

WIRING

STEP 1
Use 14 gauge stranded wire to 20', 12 gauge to 50', from power source.

STEP 2
Use a 10-15 amp rated on-off switch on the (+) positive (red) motor lead.

STEP 3
Install a 10 amp fuse protection on the positive lead.

FIG. 1

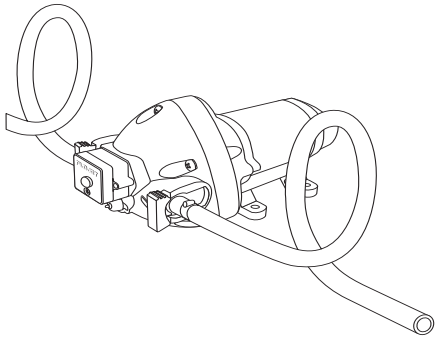

Note: To help reduce noise and vibration of the pump through the system use flexible lines on the inlet and outlet of the pump as shown above. Be sure to use lines rated to not collapse under pump vacuum.

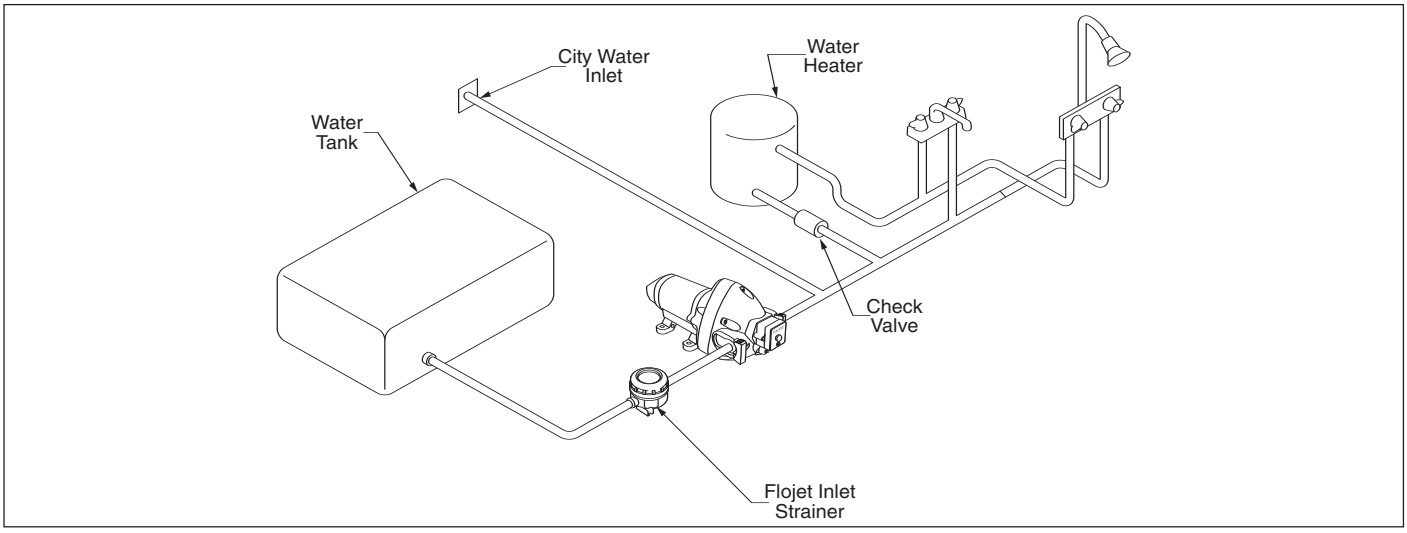

TROUBLESHOOTING

WARNING: BEFORE SERVICING PUMP, TURN OFF PUMP AND DRAIN WATER FROM SYSTEM!!

Failure to Prime - Motor operates, but no pump discharge
- Restricted intake or discharge line
- Air leak in intake line
- Debris in pump
- Punctured pump diaphragm (pump leaks)
- Crack in pump housing

Motor falls to turn on
- Loose wiring connection
- Pump circuit has no power
- Blown fuse
- Pressure switch failure
- Defective motor

Pulsating Flow
- Restricted pump delivery. Check discharge lines, fittings and valves for clogging or undersizing

Pump Fails to Turn Off After All Fixtures Are Closed
- Empty water tank
- Insufficient voltage to pump (low battery)
- Punctured pump diaphragm (pump leaks)
- Discharge line leak
- Defective pressure switch

Low Flow and Pressure
- Air leak at pump intake
- Accumulation of debris inside pump and plumbing
- Worn pump bearing (excessive noise)
- Punctured pump diaphragm (pump leaks)
- Defective motor

EXPLODED VIEW

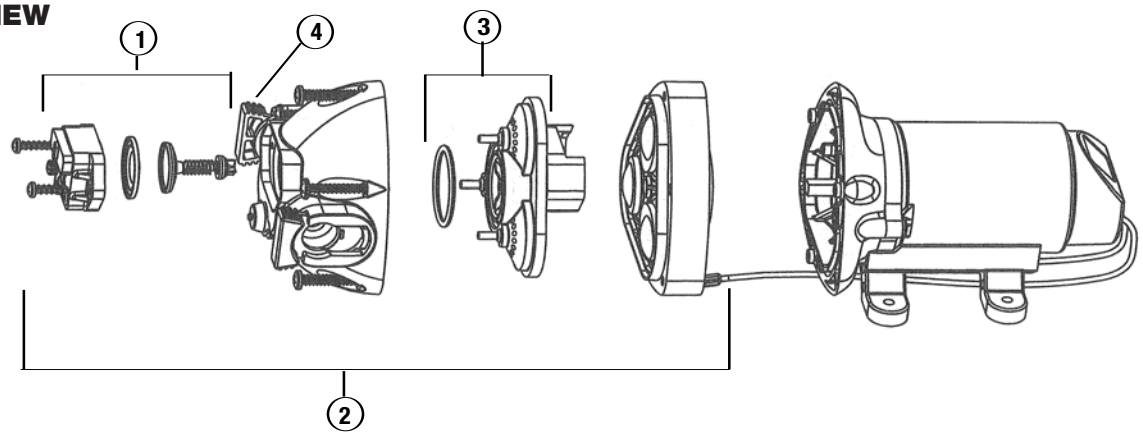

AUTOMATIC WATER SYSTEM PUMP SERVICE PARTS

KEY#	DESCRIPTION	3426XXX	3526XXX	3626XXX
1	Pressure Switch	2091025	2091050	2091040
2	Pumphead Assembly	20406047A (2.9 gpm) 20406048A (2.0 gpm)	20406045A	20406046A
3	Check Valve Assembly	20407034	20407034	20407034
4	Slide Clips (Pair)	21000407A	21000407A	21000407A

ACCESSORIES
QUICK CONNECT PORT SYSTEM

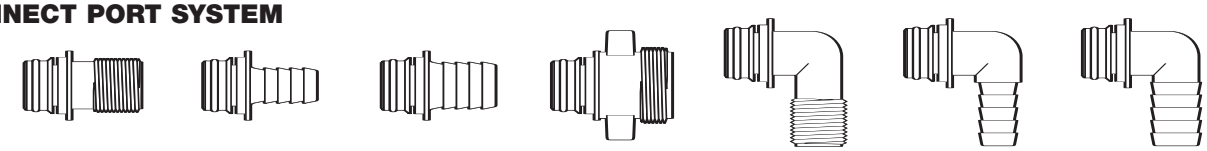

20381000	20381002	20381006	20381007	20381008	20381009	20381010
PUMP PORT x 1/2" MALE QEST. STRAIGHT	PUMP PORT x 1/2" HOSE BARB STRAIGHT	PUMP PORT x 3/4" HOSE BARB STRAIGHT	QUAD PORT x GARDEN HOSE STRAIGHT	PUMP PORT x 1/2" MALE QEST. 90° ELBOW	PUMP PORT x 1/2" HOSE BARB 90° ELBOW	PUMP PORT x 3/4" HOSE BARB 90° ELBOW

- The above part numbers are packaged with 2 fittings per bag.

STRAINERS	Pump Series	Strainer Number	Inlet	Outlet	Screen
	3X26XXX	1740012	1/2 Barb	Quad Port	40 Mesh
		1740002	1/2 Barb	1/2 Barb	40 Mesh
		1740004	1/2 M Qest	1/2 M Qest	40 Mesh
		1740014	1/2 M Qest	Quad Port	40 Mesh

SYSTEM CARE AND MAINTENANCE

Winterizing

Allowing water to freeze in the system may result in damage to the pump and plumbing system.

Non-Toxic antifreeze for potable water may be used with Flojet pumps. Follow manufacturers recommendations.

Refer to coach or equipment manufacturers instructions for their specific winterizing and drainage procedures.

Do not use automotive antifreeze to winterize potable water systems. These solutions are highly toxic and may cause serious injury or death if ingested.

1. Drain the water tank. Open tank drain valve. You may use the pump to drain the tank by opening all the faucets in the system. Allow the pump to operate untill the tank is empty. Do not operate the pump more than 15 minutes continuously.
2. Open all faucets and purge the water from the plumbing system. Turn power to the pump off. Be sure that all the water from the drain lines are drained.
3. Remove quick connect inlet and outlet fittings from the pump and turn the pump on to pump out remaining water from the pump head. Be sure to have a catch pan or a rag under the pump to prevent water from spilling on to the RV. Turn the pump off once the plumbing is empty. Leave the fittings disconnected from the pump until the system is ready to be used again. Make a note on your tank filler that the plumbing is not connected.
4. Be sure that all faucets are left open to protect against damage to the plumbing.

Sanitizing

Portable water systems require periodic maintenance to deliver a consistent flow of fresh water. Depending on use and the environment the system is subject to, sanitizing is recommended prior to storing and before using the water system after a period of storage.

Systems with new components, or ones that have been subjected to contamination, should also be disinfected as follows:

NOTE: The sanitizing procedure is in conformance with the approved procedures of RVIA ANSI A119.2 and the

US Public Health Service.

1. Use of the following methods to determine the amount of common household bleach needed to sanitize the tank.
   A) Multiply “gallons of tank capacity” by 0.13; the result is the ounces of bleach needed to sanitize the tank.
   B) Multiply “Liters of tank capacity” by 1.0; the result is the milliliters of bleach needed to sanitize the tank.
2. Mix into solution the proper amount of bleach within a container of water
3. Pour the solution (water/bleach) into the tank and fill the tank with potable water.
4. Open ALL faucets (hot and cold) allowing the water to run until the distinct odor of chlorine is detected.
5. The standard solution must have four (4) hours of contact time to disinfect completely. Doubling the solution concentration allows for contact time of one (1) hour.
6. When the contact time is completed, drain the tank. Refill with potable water and purge the plumbing of all sanitizing solution.

WARRANTY

FLOJET warrants this product to be free of defects in material and/or workmanship for a period of two years after purchase by the customer from FLOJET. During this two warranty period, FLOJET will at its option, at no charge to the customer, repair or replace this product if found defective in material or workmanship, with a new or reconditioned product, but not to include costs of removal or installation.

This is only an overview of our Limited Warranty. If you would like a copy of our warranty, please call or write FLOJET.

RETURN PROCEDURE

Prior to returning any product to FLOJET, call customer service for an authorization number. This number must be written on the outside of the shipping package. Place a note inside the package with an explanation regarding the reason for return as well as the authorization number. Include your name, address and phone number.

www.flojet.com

Flojet

ITT Industries
Engineered for life

U.S.A.
Flojet
Cape Ann Industrial Park
Gloucester, MA 01930
Tel: 978.281.0440
Fax: 978.283.2619

UNITED KINGDOM
Flojet
Bingley Road, Hoddesdon
Hertfordshire EN11 OBU
Tel: +44 (0) 1992 450145
Fax: +44 (0) 1992 467132

CANADA
Fluid Products Canada
55 Royal Road
Guelph, Ontario N1H 1T1
Tel: 519 821.1900
Fax: 519 821.2569

JAPAN
NHK Jabsco Company Ltd.
3-21-10, Shin-Yokohama
Kohoku-Ku, Yokohama, 222
Tel: 045.475.8906
Fax: 045.475.8908

GERMANY
Jabsco GmbH
Oststrasse 28
22840 Norderstedt
Tel: +49-40-53 53 73 -0
Fax: +49-40-53 53 73 -11

ITALY
Jabsco Marine Italia
Via Tommaseo, 6
20059 Vimercate, Milano
Tel: +39 039 685 2323
Fax: +39 039 666 307

Copyright 2005, ITT Industries Printed in U.S.A. All Rights Reserved

Form: 81000-384 Rev. B 06/2005